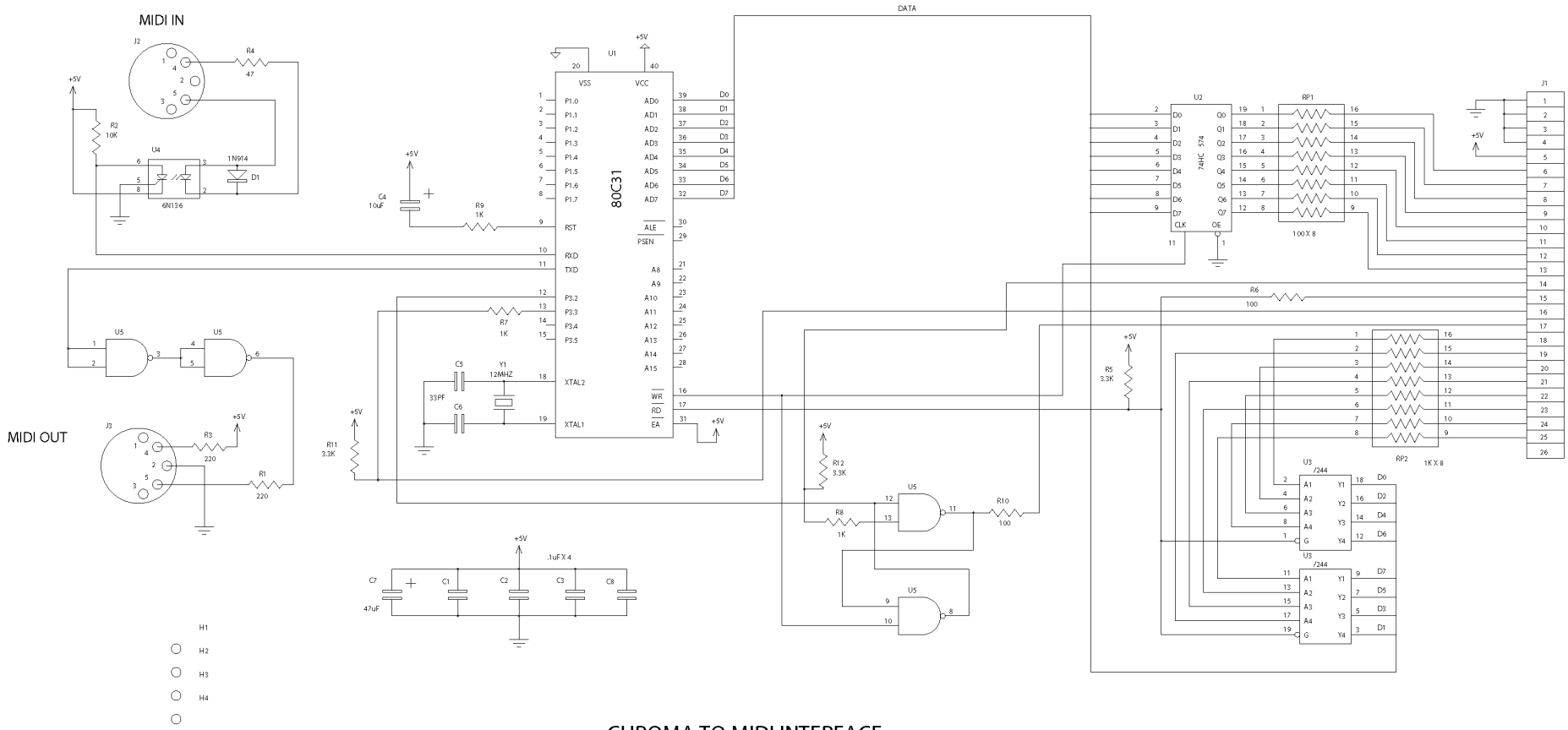

CHROMA TO MIDI INTERFACE